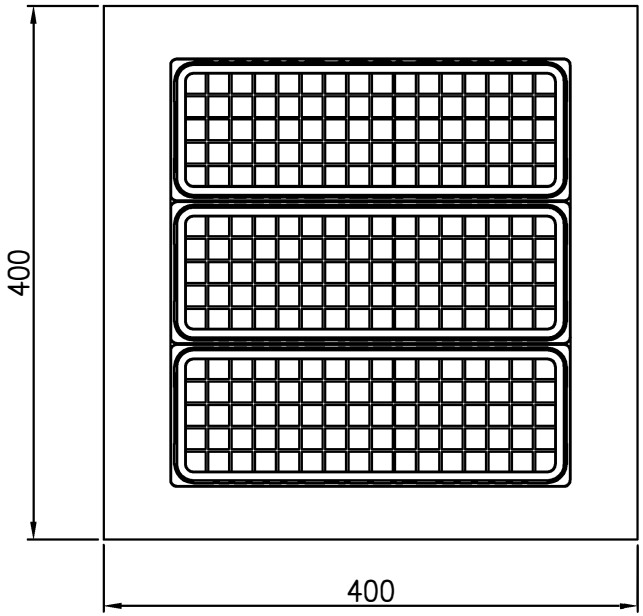

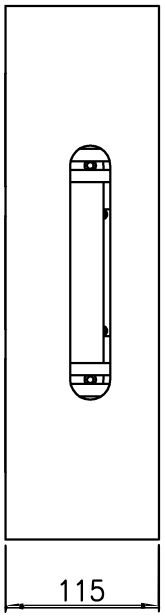

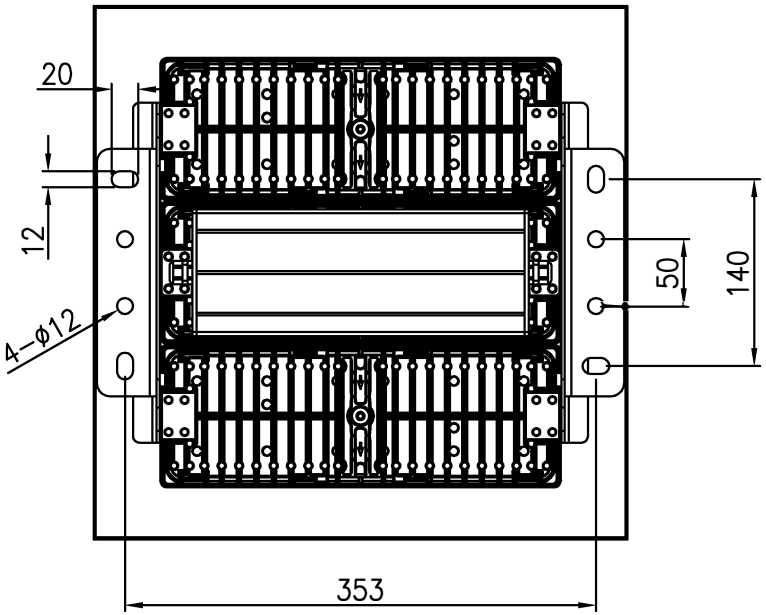

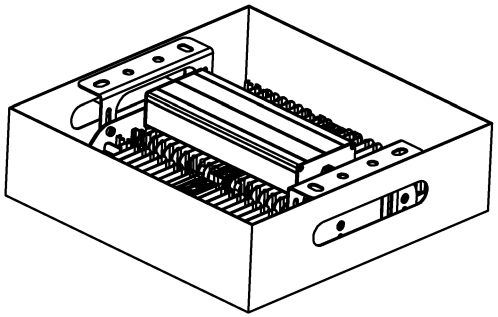

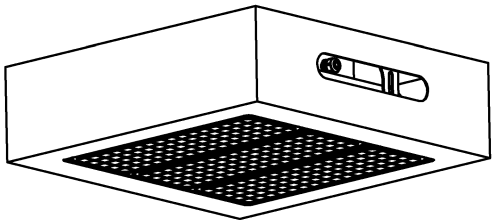

MC 1x3